FUSES	CAT No.	MANUFACTURER
EXP	4038361C03CB	COOPER
ISO	3001861A05M	COOPER

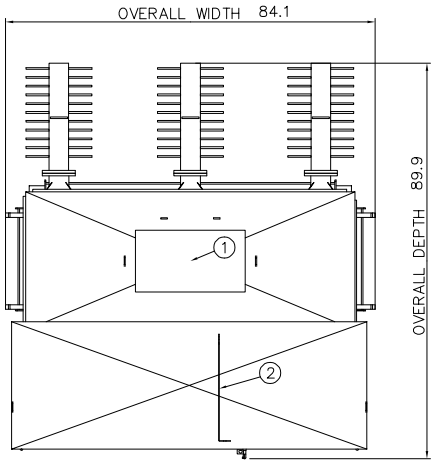

TOP VIEW

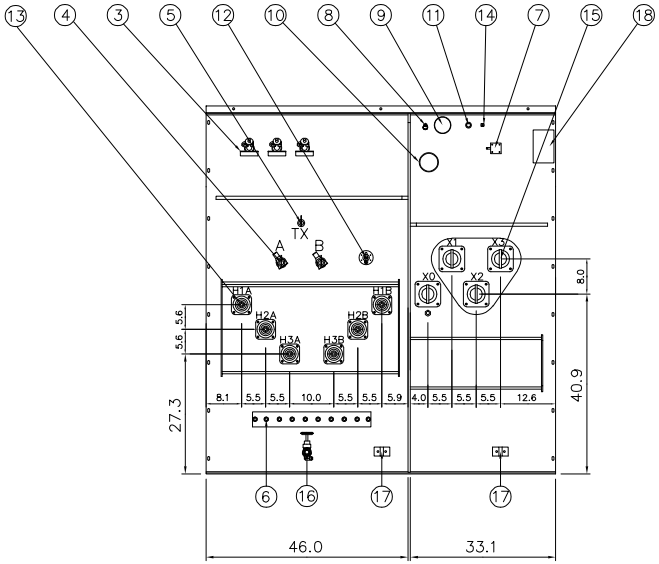

HV & LV DETAIL

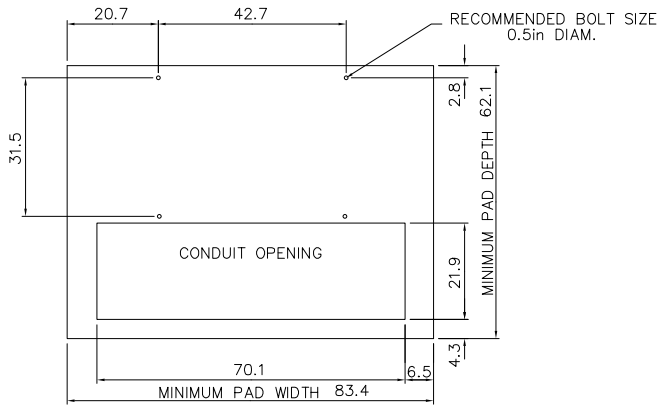

MOUNTING PAD–SUGGESTED MINIMUM SIZE

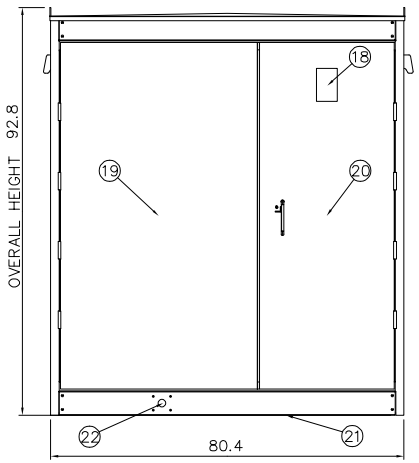

FRONT VIEW

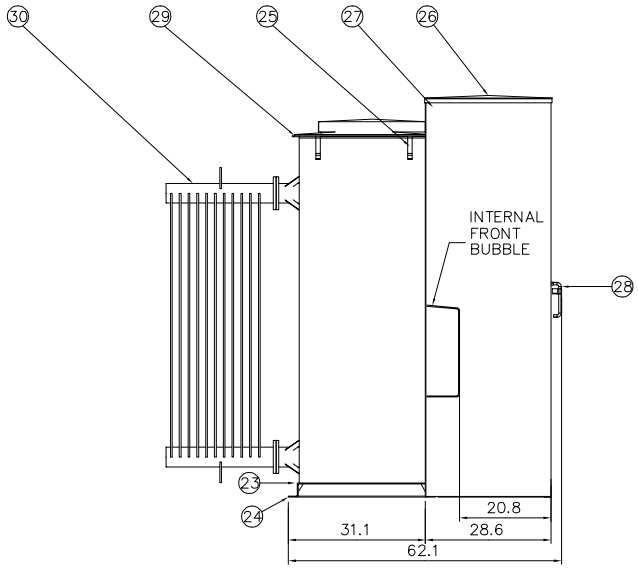

SIDE VIEW

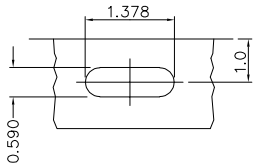

ANCHORING DETAIL

1.– HAND HOLE 14"X25"
2.– REMOVABLE PARTITION
3.– BAYONET FUSE HOLDER WITH DRIP SHIELD
4.– (2) 2 POSITION LOOP SWITCH 630 AMP
5.– (1) 2 POSITION RADIAL SWITCH 300 AMP
6.– GROUND BUS
7.– LIQUID LEVEL GAUGE
8.– PRESSURE RELIEF VALVE
9.– PRESSURE VACUUM GAUGE
10.– THERMOMETER
11.– 1 INCH FILL PROVISION
12.– TAP CHANGER
13.– HV INTEGRATED BUSHING 25KV CLASS, 125KV BIL, 600A
14.– SCHRADER VALVE
15.– LV BUSHING 12 HOLE BLADE SUPPORTED 45KVBIL 3300A
16.– 1" DRAIN VALVE WITH 3/8" SAMPLER
17.– GROUND PADS
18.– ANODIZED ALUMINUM NAMEPLATE
19.– HV DOOR W/PENTA HEAD BOLT
20.– LV DOOR W/PENTA HEAD BOLT
21.– REMOVABLE SILL (MILD STEEL)
22.– FAULT INDICATOR PROVISION
23.– TANK (MILD STEEL)
24.– BASE (MILD STEEL)
25.– LIFTING LUGS
26.– CABINET REMOVABLE HOOD
27.– CABINET (MILD STEEL)
28.– DOOR HANDLE WITH PROVISION FOR PADLOCK
29.– TANK COVER
30.– REMOVABLE RADIATORS (MILD STEEL)

Note: Overall Dimensions are nominal with tolerance of +/– 0.5 all other dimensions have a tolerance of +/– 0.1

www.prolec.energy/prolecge

TRANSFORMER WEIGHTS

CORE & COIL	3 682 LBS
TANK AND FITTINGS	4 064 LBS
565 GALLONS OF FR3	4 247 LBS
TOTAL WEIGHT	11 993 LBS

TOTAL WEIGHT HAVE A TOLERANCE OF +/–5%

COLOR: MUNSELL GREEN 7GY 3.29/1.5

DESIGNED TO OPERATE BELOW 3300.0 FEET ABOVE SEA LEVEL

Draftman:	TRADE
Rev:	EEGC
App:	EEGC
Scale:	1:40
Dimensions	in
Date:	06/23/2023
Rev:	0

Customer: TURTLE AND HUGHES INC

REQ. NO.

Title: OUT LINE DRAWING
1500 KVA, 3 PHASE, 60 HERTZ, 13200 – 480GrdY/277 VOLT
65 °C, DELTA – WYE COOLING KNAN

prolec® | GE

Drawing No. RJQ070B801

3 PHASE PADMOUNTED TRANSFORMER CLASS KNAN

65°C RISE 60HERTZ MFG DATE SER

kVA 1500

HV 13200

LV 480GrdY/277

IMPEDANCE @ 85°C
RATED VOLTS %

ORDER NUM RJQ070

BIL HV 95 BIL LV 30 MAT HV Al MAT LV Al

STEP-UP OPERATION

GALLONS OF NATURAL ESTER	565

MASS	kg	pounds
CORE & COIL UNTANKING (HEAVIEST PIECE)	1671	3682
TANK	1844	4064
LIQUID NATURAL ESTER	1927	4247
TOTAL WT	5443	11993

TOTAL WEIGHT HAVE A TOLERANCE OF +/-5%

TAP CHANGER		
TAP POS	VOLTAGE	65°C AMPS
1/A	13860	62.5
2/B	13530	64.0
3/C	13200	65.6
4/D	12870	67.3
5/E	12540	69.1

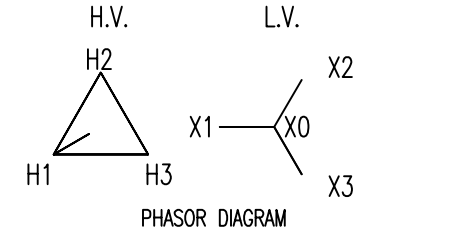

PHASOR DIAGRAM

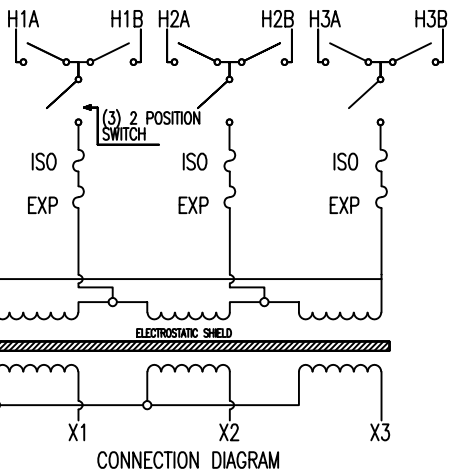

CONNECTION DIAGRAM

UL LISTED LIQUID FILLED DISTRIBUTION TRANSFORMER EPV

MAXIMUM OPERATING PRESSURES OF LIQUID PRESERVATION SYSTEM: 48kPa (7lbf/in2) POSITIVE AND 34 kPa (5 lbf/in2) NEGATIVE
TANK DESIGNED FOR 48kPa (7 lbf/in2) VACUUM FILLING
LIQUID LEVEL BELOW TOP SURFACE OF THE HIGHEST POINT OF THE HIGHEST HANDHOLE FLANGE AT 25 °C IS 200 mm (7.87in)
LIQUID LEVEL CHANGES 13 mm (0.5 in) PER 10 °C CHANGE IN LIQUID TEMPERATURE
PERCENT IMPEDANCE STATED ABOVE AT RATED VOLTS AT 1500 KVA
CAUTION BEFORE OPERATING READ INSTRUCTION GEI-79025M
CONTAINS NO DETECTABLE LEVEL OF PCB (LESS THAN 1 PPM) AT THE TIME OF MANUFACTURE

MADE IN MEXICO PROLEC GE INTERNATIONAL S. DE R.L. DE C.V. www.prolec.energy/prolecge

IMPEDANCE MEETS ANSI STANDARDS
WITH TOLERANCE OF +/-7.5%
ACTUAL TESTED IMPEDANCE WILL BE
STAMPED ON NAME PLATE

REV.		Draftman: TRADE	Customer/Project Name: TURTLE AND HUGHES INC	Cat. Number:
		Review: EEGC	Title: NAMEPLATE	
		App: EEGC	Description: 1500 kVA, 3 PHASE, 60 HERTZ, 13200-480GrdY/277 VOLT 65 °C DELTA - WYE, COOLING KNAN	
		Sheet 1 of 1		DRAWING NUMBER: RJQ070C0A
		Rev. 0		

prolec® | GE

3 PHASE PADMOUNTED TRANSFORMER CLASS KNAN

65°C RISE 60HERTZ MFG DATE **FEB-24** SER **M23J16435**

kVA 1500

HV 13200

LV 480GrdY/277

IMPEDANCE @ 85°C RATED VOLTS **5.62 %**

ORDER NUM RJQ070 **01-001**

BIL HV 95 BIL LV 30 MAT HV Al MAT LV Al

STEP-UP OPERATION

GALLONS OF NATURAL ESTER	565

MASS	kg	pounds
CORE & COIL UNTANKING (HEAVIEST PIECE)	1671	3682
TANK	1844	4064
LIQUID NATURAL ESTER	1927	4247
TOTAL WT	5443	11993

TOTAL WEIGHT HAVE A TOLERANCE OF +/-5%

TAP CHANGER		
TAP POS	VOLTAGE	65°C AMPS
1/A	13860	62.5
2/B	13530	64.0
3/C	13200	65.6
4/D	12870	67.3
5/E	12540	69.1

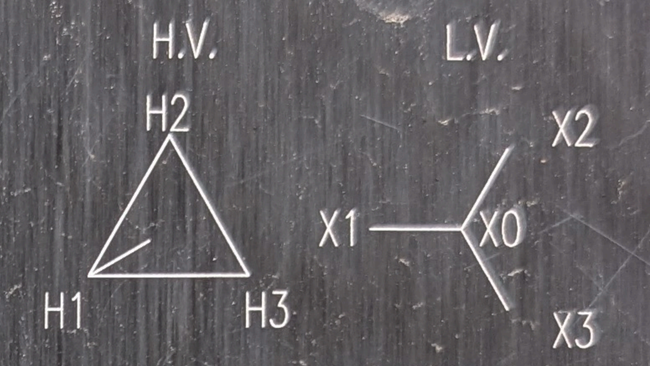

PHASOR DIAGRAM

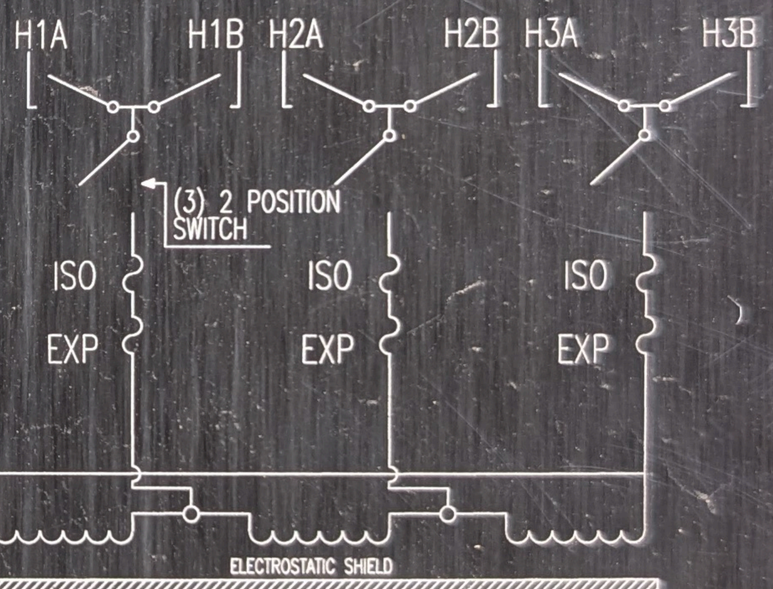

CONNECTION DIAGRAM

UL LISTED
LIQUID FILLED DISTRIBUTION TRANSFORMER (ZPJ)

MAXIMUM OPERATING PRESSURES OF LIQUID PRESERVATION SYSTEM: 48kPa (7lbf/in2) POSITIVE AND 34 kPa (5 lbf/in2) NEGATIVE
TANK DESIGNED FOR 48kPa (7 lbf/in2) VACUUM FILLING
LIQUID LEVEL BELOW TOP SURFACE OF THE HIGHEST POINT OF THE HIGHEST HANDHOLE FLANGE AT 25 °C IS 200 mm (7.87in)
LIQUID LEVEL CHANGES 13 mm (0.5 in) PER 10 °C CHANGE IN LIQUID TEMPERATURE
PERCENT IMPEDANCE STATED ABOVE AT RATED VOLTS AT 1500 KVA
CAUTION BEFORE OPERATING READ INSTRUCTION GEI-79025M
CONTAINS NO DETECTABLE LEVEL OF PCB (LESS THAN 1 PPM) AT THE TIME OF MANUFACTURE

MADE IN MEXICO PROLEC GE INTERNATIONAL S. DE R.L. DE C.V. www.prolec.energy/prolecge