FUSES	CAT No.	MANUFACTURER
EXP	4000358C14	COOPER
ISO	7580ZB0799	ERMCO

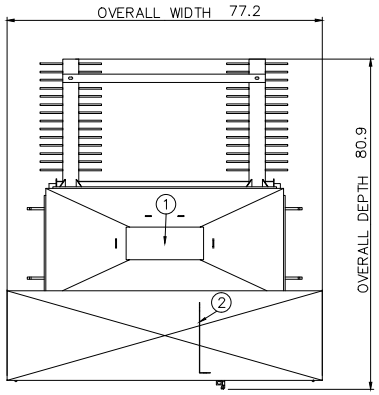

TOP VIEW

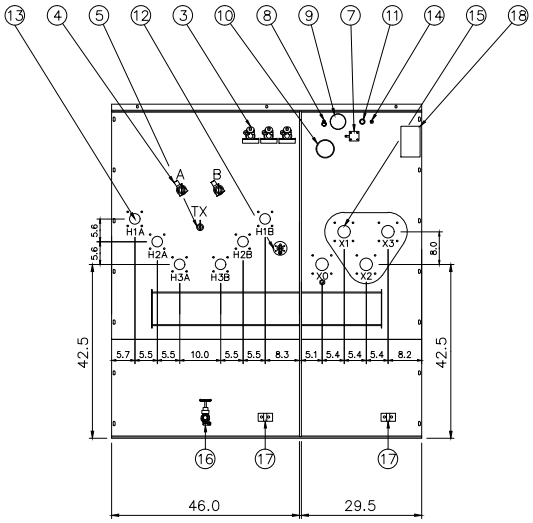

HV & LV DETAIL

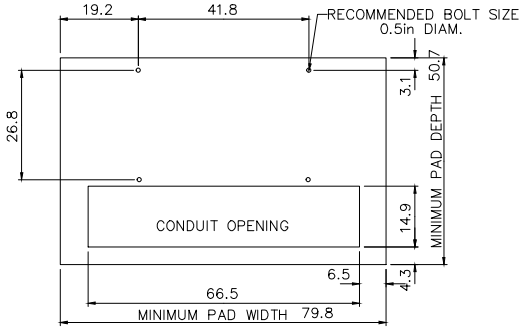

MOUNTING PAD–SUGGESTED MINIMUM SIZE

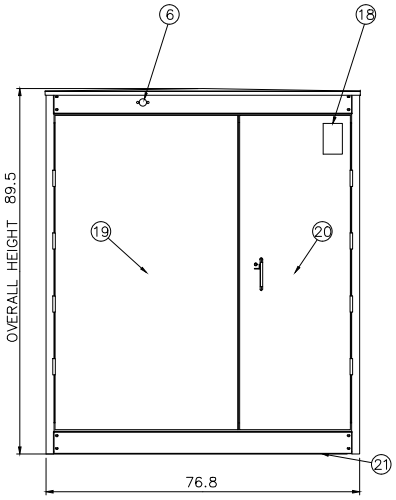

FRONT VIEW

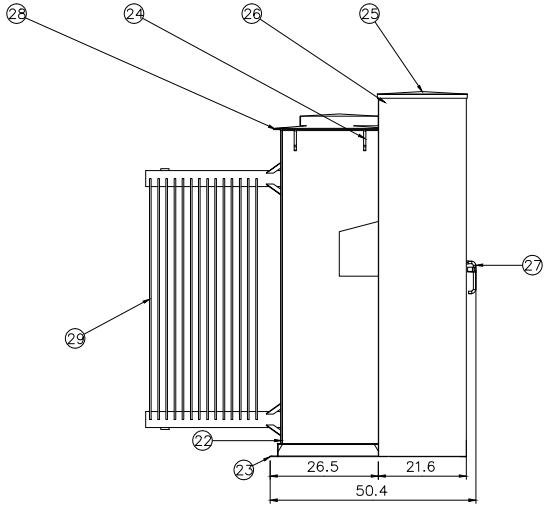

SIDE VIEW

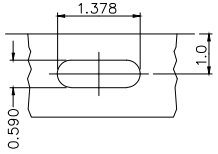

ANCHORING DETAIL

COLOR: MUNSELL GREEN 7GY 3.29/1.5

1.– HAND HOLE 8"X19"
2.– REMOVABLE PARTITION
3.– BAYONET FUSE HOLDER WITH DRIP SHIELD
4.– (2) 2 POSITION LOOP SWITCH 630 AMP
5.– (1) 2 POSITION RADIAL SWITCH 300 AMP W/LOCKABLE HANDLE
6.– FAULT INDICATOR PROVISION
7.– LIQUID LEVEL GAUGE
8.– PRESSURE RELIEF VALVE, VIAT 301–010–01N 35 SCFM
9.– PRESSURE VACUUM GAUGE
10.– THERMOMETER
11.– 1 INCH FILL PROVISION
12.– TAP CHANGER
13.– HV INTEGRATED BUSHING 25KV CLASS, 125KV BIL, 600A
14.– NITROGEN VALVE
15.– LV BUSHING 12 HOLE BLADE SUPPORTED 30KVBIL 2200A
16.– 1" DRAIN VALVE WITH 3/8" SAMPLER HJ DV1000–001–FB
17.– GROUND PADS + GROUND CONNECTOR
18.– ANODIZED ALUMINUM NAMEPLATE
19.– HV DOOR W/PENTA HEAD BOLT
20.– LV DOOR W/PENTA HEAD BOLT
21.– REMOVABLE SILL (MILD STEEL)
23.– TANK (MILD STEEL)
24.– BASE (MILD STEEL)
25.– LIFTING LUGS
26.– CABINET REMOVABLE HOOD
27.– CABINET (MILD STEEL)
28.– DOOR HANDLE WITH PROVISION FOR PADLOCK
29.– TANK COVER
30.– RADIATORS (MILD STEEL)

Note: Overall Dimensions are nominal with tolerance of +/– 0.5 all other dimensions have a tolerance of +/– 0.1

www.prolec.energy/prolecge

TRANSFORMER WEIGHTS

CORE & COIL	2 759 LBS
TANK AND FITTINGS	2 706 LBS
372 GALLONS OF FR3	2 796 LBS
TOTAL WEIGHT	8 261 LBS

DESIGNED TO OPERATE BELOW 3300.0 FEET ABOVE SEA LEVEL

Draftman:	TRADE
Rev:	FCR
App:	FCR
Scale:	1:40
Dimensions	in
Date:	06/21/2023
Rev:	0

Customer: DISTRIBUTED SOLAR OPERATIONS

REQ. NO.

Title: OUT LINE DRAWING
1000 KVA, 3 PHASE, 60 HERTZ, 13200 – 480Y/277 VOLT
65 °C, DELTA – WYE COOLING KNAN

prolec | GE

Drawing No. RJQ07101B801

3 PHASE PADMOUNTED TRANSFORMER CLASS KNAN

65°C RISE 60HERTZ MFG DATE SER

kVA 1000

HV 13200

LV 480Y/277

IMPEDANCE @ 85°C RATED VOLTS %

ORDER NUM RJQ071

BIL HV 95 BIL LV 30 MAT HV Al MAT LV Al

STEP-UP OPERATION

GALLONS OF NATURAL ESTER	371

MASS	kg	pounds
CORE & COIL UNTANKING (HEAVIEST PIECE)	1252	2759
TANK	1228	2706
LIQUID NATURAL ESTER	1269	2796
TOTAL WT	3749	8261

TAP CHANGER		
TAP POS	VOLTAGE	65°C AMPS
1/A	13860	41.7
2/B	13530	42.7
3/C	13200	43.7
4/D	12870	44.9
5/E	12540	46.0

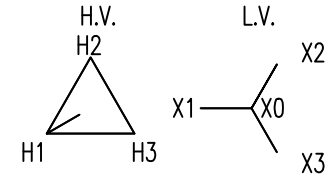

PHASOR DIAGRAM

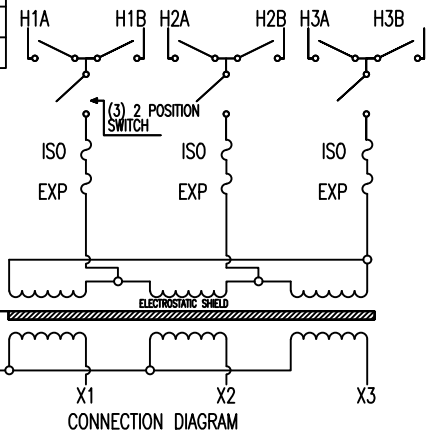

CONNECTION DIAGRAM

LISTED LIQUID-FILLED DISTRIBUTION TRANSFORMER E79

MAXIMUM OPERATING PRESSURES OF LIQUID PRESERVATION SYSTEM: 48kPa (7lbf/in2) POSITIVE AND 34 kPa (5 lbf/in2) NEGATIVE
TANK DESIGNED FOR 48kPa (7 lbf/in2) VACUUM FILLING
LIQUID LEVEL BELOW TOP SURFACE OF THE HIGHEST POINT OF THE HIGHEST HANDHOLE FLANGE AT 25 °C IS 155 mm (6.1in)
LIQUID LEVEL CHANGES 12 mm (0.5 in) PER 10 °C CHANGE IN LIQUID TEMPERATURE
PERCENT IMPEDANCE STATED ABOVE AT RATED VOLTS AT 1000 KVA
CAUTION BEFORE OPERATING READ INSTRUCTION GEI-79025M
CONTAINS NO DETECTABLE LEVEL OF PCB (LESS THAN 1 PPM) AT THE TIME OF MANUFACTURE

MADE IN MEXICO PROLEC GE INTERNATIONAL S. DE R.L. DE C.V. www.prolec.energy/prolecge

IMPEDANCE MEETS ANSI STANDARDS
WITH TOLERANCE OF +/-7.5%
ACTUAL TESTED IMPEDANCE WILL BE
STAMPED ON NAME PLATE

REV.

Draftman: TRADE	Customer/Project Name: DISTRIBUTED SOLAR OPERATIONS		Cat. Number:
Review: FCR	Title: NAMEPLATE		
App: FCR	Description: 1000 kVA, 3 PHASE, 60 HERTZ, 13200-480Y/277 VOLT 65 °C DELTA - WYE, COOLING KNAN		
Sheet 1 of 1		DRAWING NUMBER: RJQ071C0A	
Rev. 0			

prolec® | GE

3 PHASE PADMOUNTED TRANSFORMER CLASS KNAN

65°C RISE 60HERTZ MFG DATE **FEB-24** SER **M23J34984**

kVA 1000

HV 13200

LV 480Y/277

IMPEDANCE @ 85°C RATED VOLTS **6.15** %

ORDER NUM RJQ071 **01-001**

BIL HV 95 BIL LV 30 MAT HV Al MAT LV Al

STEP-UP OPERATION

GALLONS OF NATURAL ESTER	371

MASS	kg	pounds
CORE & COIL UNTANKING (HEAVIEST PIECE)	1252	2759
TANK	1228	2706
LIQUID NATURAL ESTER	1269	2796
TOTAL WT	3749	8261

TAP CHANGER		
TAP POS	VOLTAGE	65°C AMPS
1/A	13860	41.7
2/B	13530	42.7
3/C	13200	43.7
4/D	12870	44.9
5/E	12540	46.0

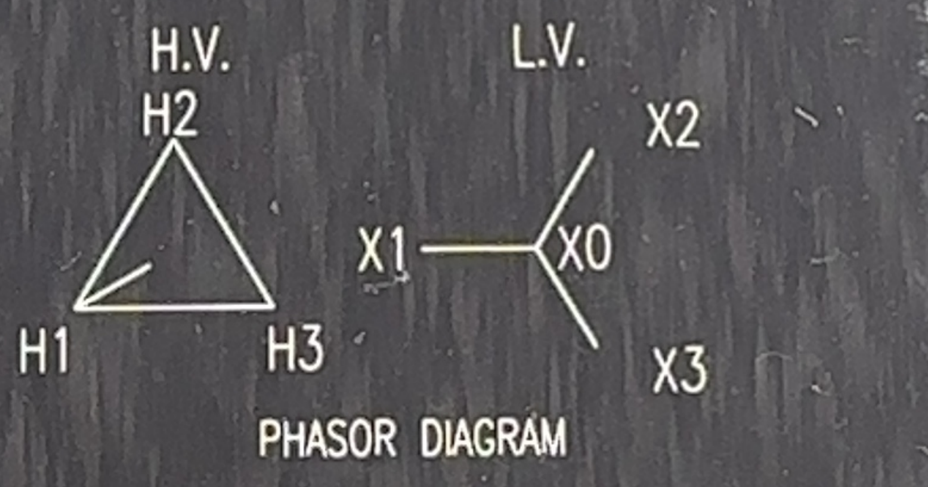

PHASOR DIAGRAM

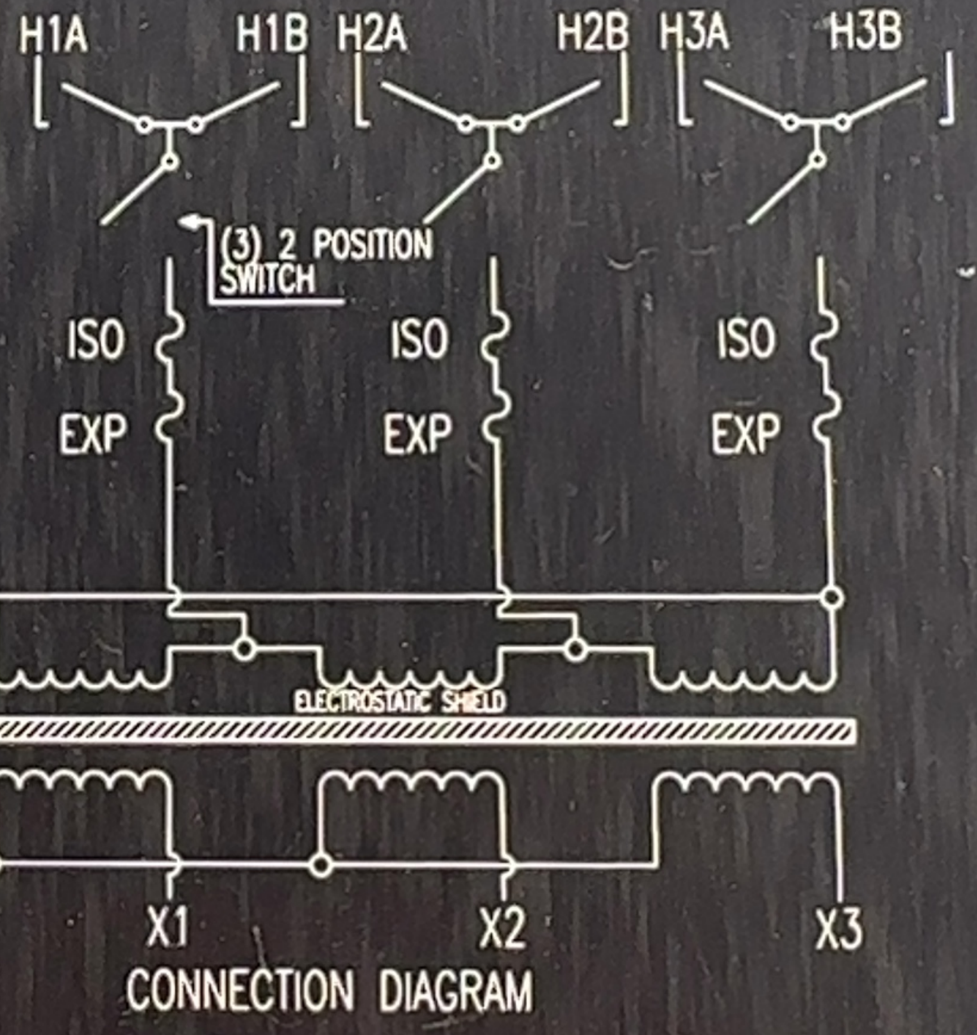

CONNECTION DIAGRAM

UL LISTED LIQUID FILLED DISTRIBUTION TRANSFORMER EPV

MAXIMUM OPERATING PRESSURES OF LIQUID PRESERVATION SYSTEM: 48kPa (7lbf/in2) POSITIVE AND 34 kPa (5 lbf/in2) NEGATIVE
TANK DESIGNED FOR 48kPa (7 lbf/in2) VACUUM FILLING
LIQUID LEVEL BELOW TOP SURFACE OF THE HIGHEST POINT OF THE HIGHEST HANDHOLE FLANGE AT 25 °C IS 155 mm (6.1in)
LIQUID LEVEL CHANGES 12 mm (0.5 in) PER 10 °C CHANGE IN LIQUID TEMPERATURE
PERCENT IMPEDANCE STATED ABOVE AT RATED VOLTS AT 1000 KVA
CAUTION BEFORE OPERATING READ INSTRUCTION GEI-79025M
CONTAINS NO DETECTABLE LEVEL OF PCB (LESS THAN 1 PPM) AT THE TIME OF MANUFACTURE

MADE IN MEXICO PROLEC GE INTERNATIONAL S. DE R.L. DE C.V. www.prolec.energy/prolecge